Concern Resolution Process

QC Story

QC STORY PROJECT

PROJECT TITLE :- To Eliminate the concern "Ding on Rear Door outer panel near styling line RH & LH" in Scorpio DC Body.

Mahindra and Mahindra Ltd, Nasik Plant, Scorpio Body shop.

	Plan	Actual
Start Date	26/08/12	26/08/12
Completion Date	15/10/12	25/10/12

Current Status:

Completed.

Phase II – QC Story

- Team Information
- Step1: Select the Theme
- Step 2: Justify the choice
- Step 3: Understand the current situation
- Step 4: Select Targets
- Step 5: Analysis (Level 1 Analysis)
- Step 6: Implement corrective measures
- Step 7: Confirm the Effects
- Step 8: Standardise
- Step 9: Summarise & Plan future actions
- Guidelines to user

Cross Functional Team

Team Leader – Leads the team, Co-ordinates the meeting
Mentor - Facilitates the team for concern resolution, provides resource.
Mostly Mentor is PU Manager.
Members – Cross Functional Team

No	Description	Name	Designation	Dept	Phone	Email
1	**Team Leader**	Prabhakar Sonawane	Asst. Manager	SBS	9860765293	sonawane.prabhakar@mahindra.com
2	**Mentor**	Dinesh Jangam	Manager	MFG. (SBS)	9850848982	jangam.dinesh@mahindra.com
3	**Member 1**	Hiray Nitin	Deputy Manager	MQA (SBS)	9881737077	hiray.nitin@mahindra.com
4	**Member 2**	Nikhil Kadam	Asst.Manager	CQA CHAKAN	8087443534	Kadam.nikhil @mahindra.com
5	**Member 3**	Vaibhav Deshmukh	Asst.Manager	MQA Genio Body	7387703355	deshmukh. vaibhav @mahindra.com

1. Select the Theme

Brief description of Problem

What- "Ding on Rear Door outer panel near styling line RH & LH" in Scorpio DC Body.
Where – Major rework (CAI) Chakan
When – During RFI Audit.
Who – Chakan RFI
How – 203 cases observed in Apr- Aug 2012

Ding on door

2. Justify the choice (reasons)

Pareto for V2 defects of Major rework area for the month of APR-AUG.2012 justifying the choice

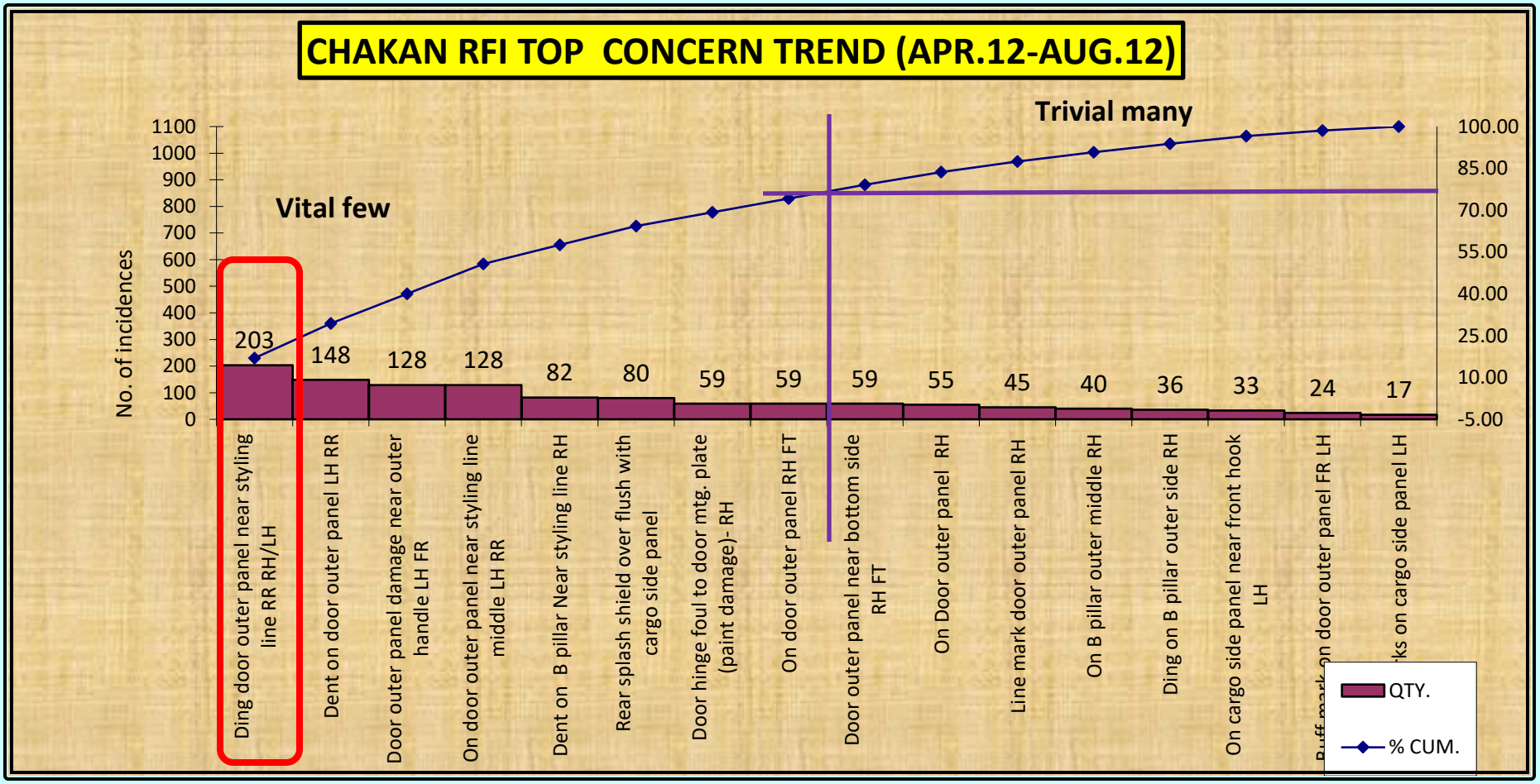

L0 Analysis for Ding on rear door outer panel

QC Story was not existed already.

Hinge reinf. Part measurement was conducted..

Check point is added in Check man list.

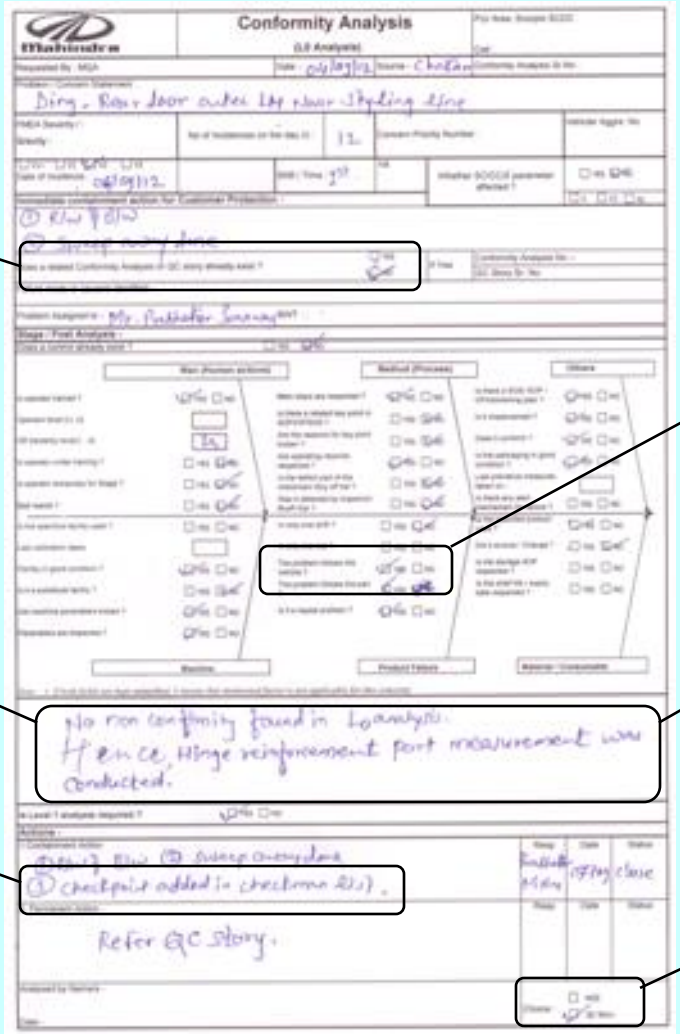

In post analysis problem follows the vehicle.

No non conformity found in L0 analysis.

For permanent action, QC Story is referred.

2.a Immediate Containment Action

- Initiated 100 % checking at Check man stage.
- Initiated 100 % checking & rework of BIW at Buyoff stage.
- Rework of doors at metal finishing line.

3. Understand the current situation

Total **203** case reported in **F13(April to Aug)** at Chakan RFI Audit**.**

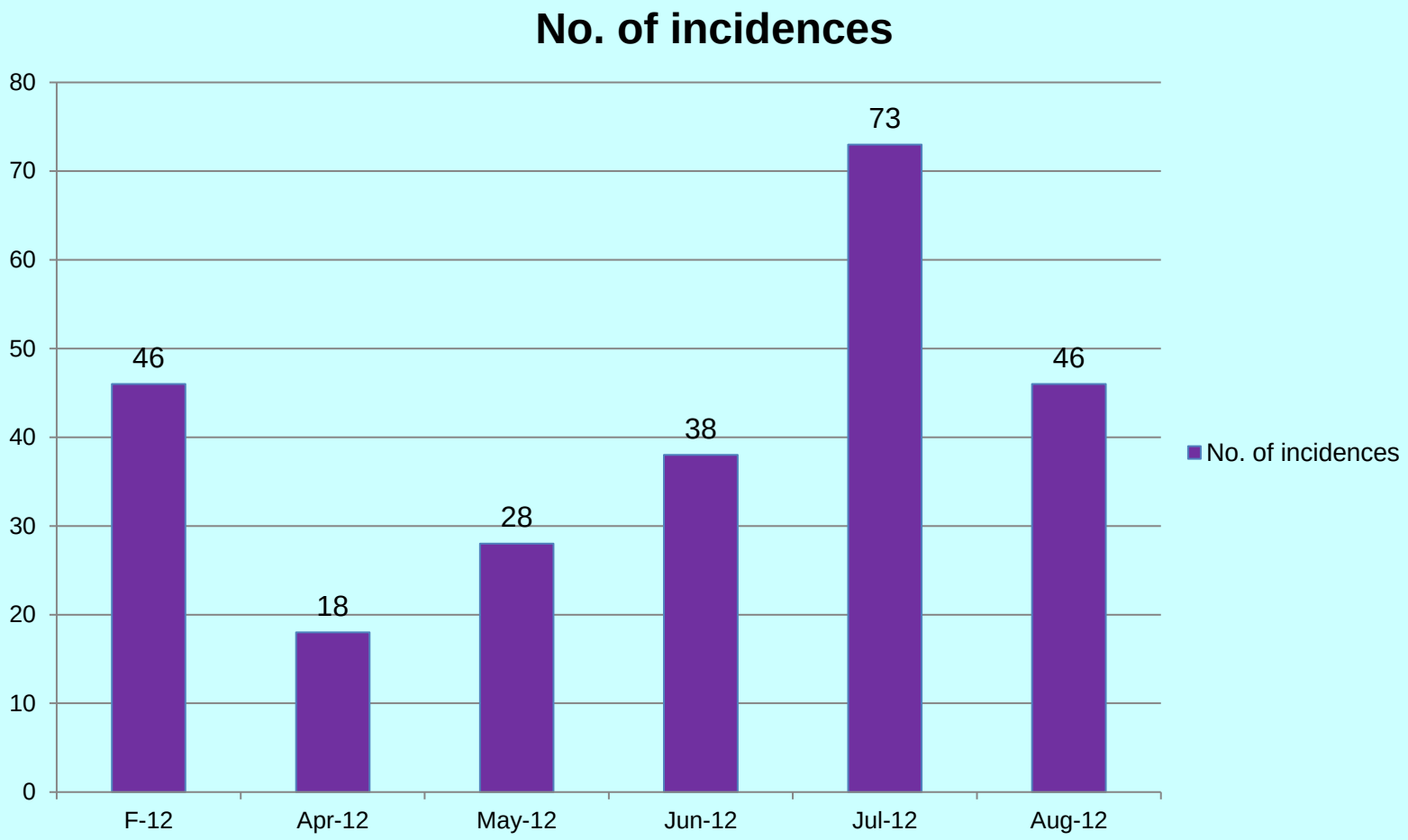

3. Understand the current situation

Rear Door Assembly Line (Scorpio Body shop)

Receiving :-
Supply of Door inner & Outer Panel from Press Shop.

St.10
Door Inner assy :- Pnl + Latch + Hinge Reinf.+ Inner waist + Run Channel

St.20
Door Inner assy :- Inner assy (From Station 10) + Intrusion Beam

St.30
Door Outer assy :- Outer pnl + Outer Waist.

St.40
Loader For :- Inner Pnl assy & Outer Pnl assy.
.

St.50
Hemming operation of inner Pnl assy & Outer Pnl assy.
.

St.60
Idle station
.

St.70
Hinge Fitment & Inner & Outer assy spotting
.

Rear Door assy transferred to trolley
.

3. Understand the current situation

Process Flow

ST.10

ST.20

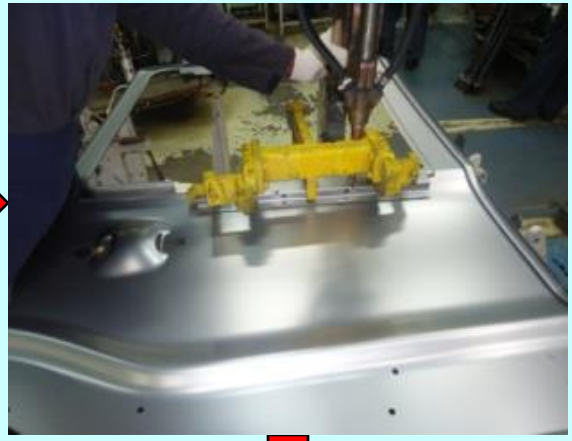

ST.30

ST.40

ST.60

ST.70

Layout of Rear door assy

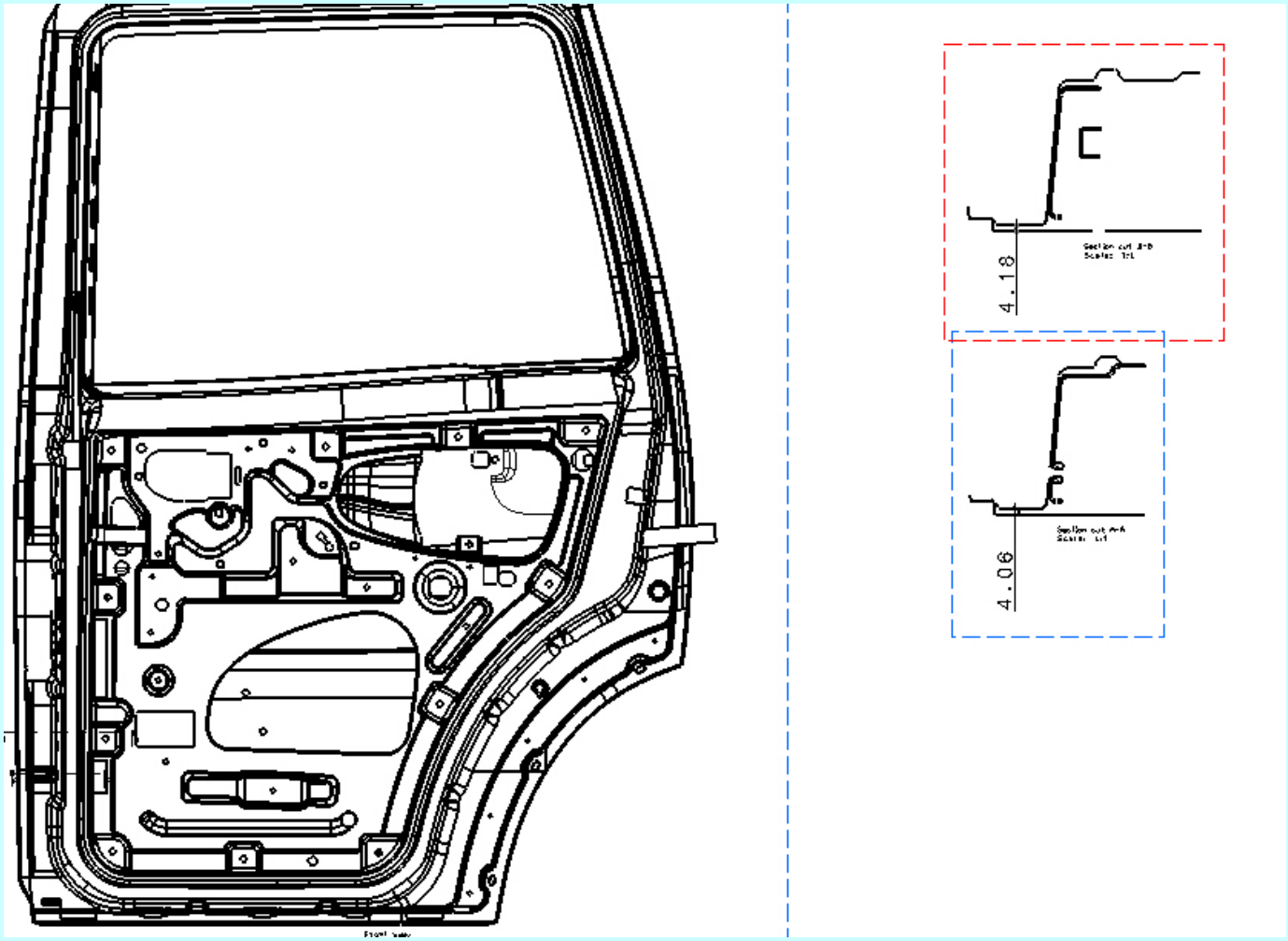

Conclusion : Layout inspection shows that the gap between hinge reinforcement & rear door outer panel should be 4.16 mm).

Step1. Understanding the problem

D. COPQ (Cost of Poor Quality) Calculation

Description	July'12	Aug'12
Number of pieces rejected last month (for the part number identified for study)	73	46
Number of pieces(Vehicle) reworked last month	73	46
Rework manhours Cost Including (Labor Cost+ FOS+Eectricity) in SAP.	672 Rs/hr.	672 Rs/hr.
Time required to rework the defect.	15 min	15 min
Total time required to rework the defects (in mins.)	1095 mins.	690 mins.
Total time required to rework the defects (in Hrs.)	18.25 Hrs.	11.5 Hrs.
Total rework cost(Rs.) for month	12264 Rs.	7728 Rs.
Extrapolated Total rework cost (Rs. for two months) (July-12 to Aug-12)	19992 Rs.	

3. Understand the current situation

Observation on Rear Door outer panel.

Total defective parts Observed =203 Nos.

Ding found on this area.

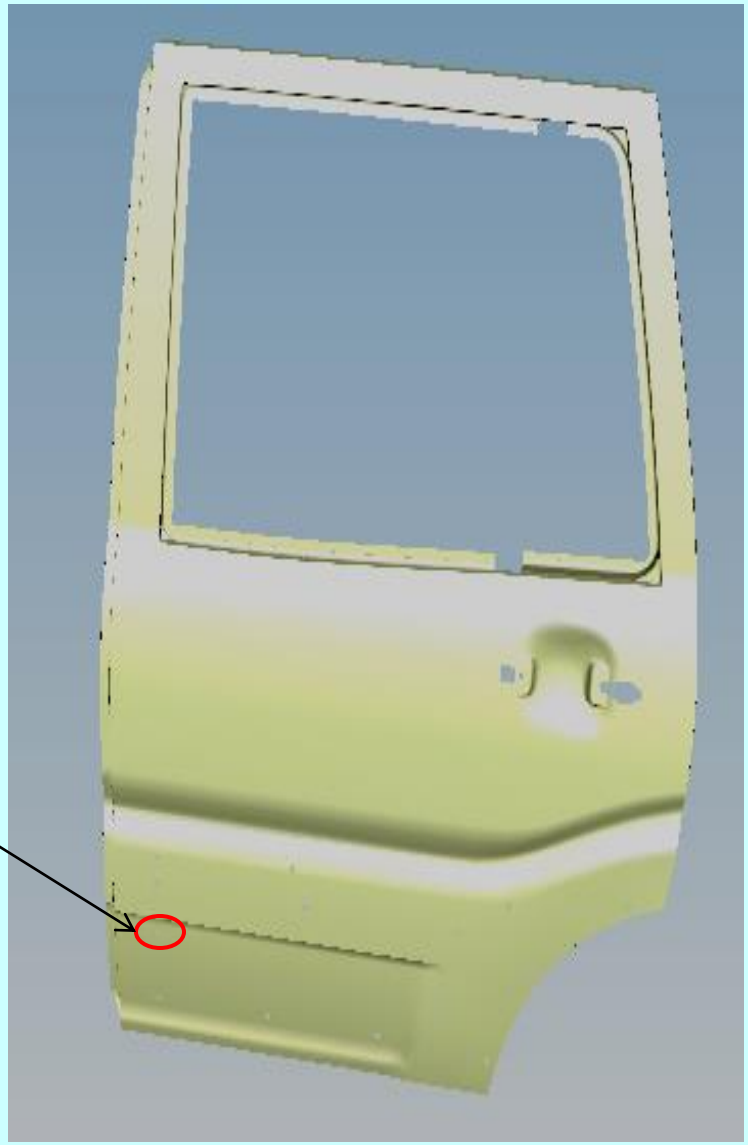

3. Understand the current situation

As per data taken from 28 BIW at receiving stage at Chakan, it was observed that the ding found on rear door LH & RH .

Concern observed in 51% of the vehicles.

Checksheet		LH		RH	
SR. NO.	BIW NO	CONCERN (DING)		CONCERN (DING)	
		YES	NO	YES	NO
1	PC08575	✓			✓
2	PC08567		✓		✓
3	PC08583	✓			✓
4	PC08580		✓		✓
5	PC08581	✓			✓
6	PC08579	✓			✓
7	PC08570	✓			✓
8	PC08557		✓		✓
9	PC08603		✓		✓
10	PC08604	✓			✓
11	PC08605	✓			✓
12	PC08629	✓			✓
13	PC08618	✓			✓
14	PC08612	✓			✓
15	PC08613		✓		✓
16	PC08596		✓		✓
17	PC08587		✓		✓
18	PC08632	✓			✓
19	PC08598	✓			✓
20	PC08577	✓			✓
21	PC08556		✓		✓
22	PC08566		✓		✓
23	PC08578	✓			✓
24	PC08585		✓		✓
25	PC08515		✓		✓
26	PC08591	✓			✓
27	PC08582	✓			✓
28	PC08590	✓			✓

Checksheet		LH		RH	
SR. NO.	BIW NO	CONCERN (DING)		CONCERN (DING)	
		YES	NO	YES	NO
1	8632	✓			✓
2	8639	✓			✓
3	8644		✓		✓
4	8617	✓			✓
5	8625	✓			✓
6	8622		✓		✓
7	8658		✓		✓
8	8655		✓		✓
9	8606		✓	✓	
10	8619		✓		✓
11	8628	✓			✓
12	8615	✓			✓
13	8630		✓		✓
14	8664		✓		✓
15	8637		✓		✓
16	8631	✓		✓	
17	8609		✓		✓
18	8608		✓		✓
19	8607	✓			✓
20	8626	✓			✓
21	8515		✓		✓
22	8479		✓		✓
23	8629	✓			✓
24	8618	✓			✓
25	8613		✓		✓
26	8596		✓		✓
27	8624		✓	✓	
28	8623		✓	✓	

4. Select Target

Present Level: 203 cases reported in 1st April-12 to 12 Aug.12

Target: Elimination of the concern till Oct. 2012.

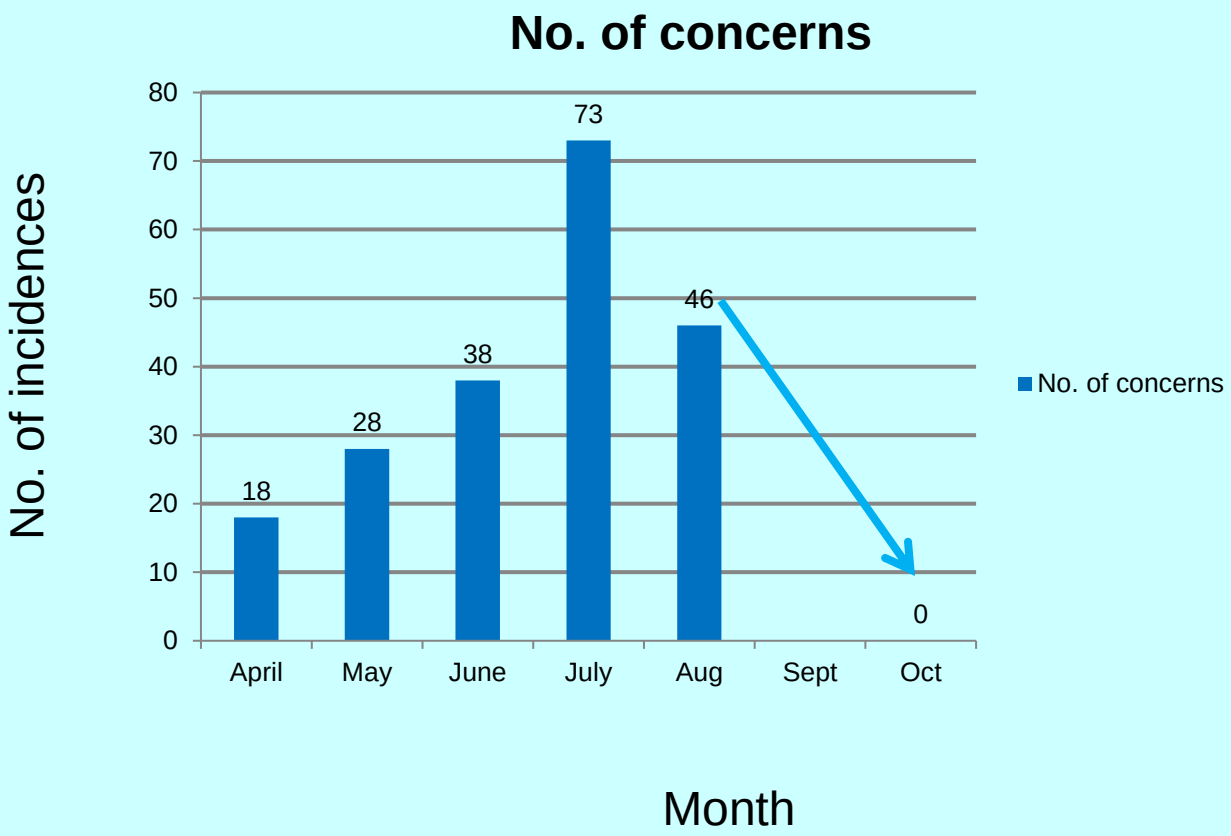

5. Analysis

5.1 Identify possible causes:

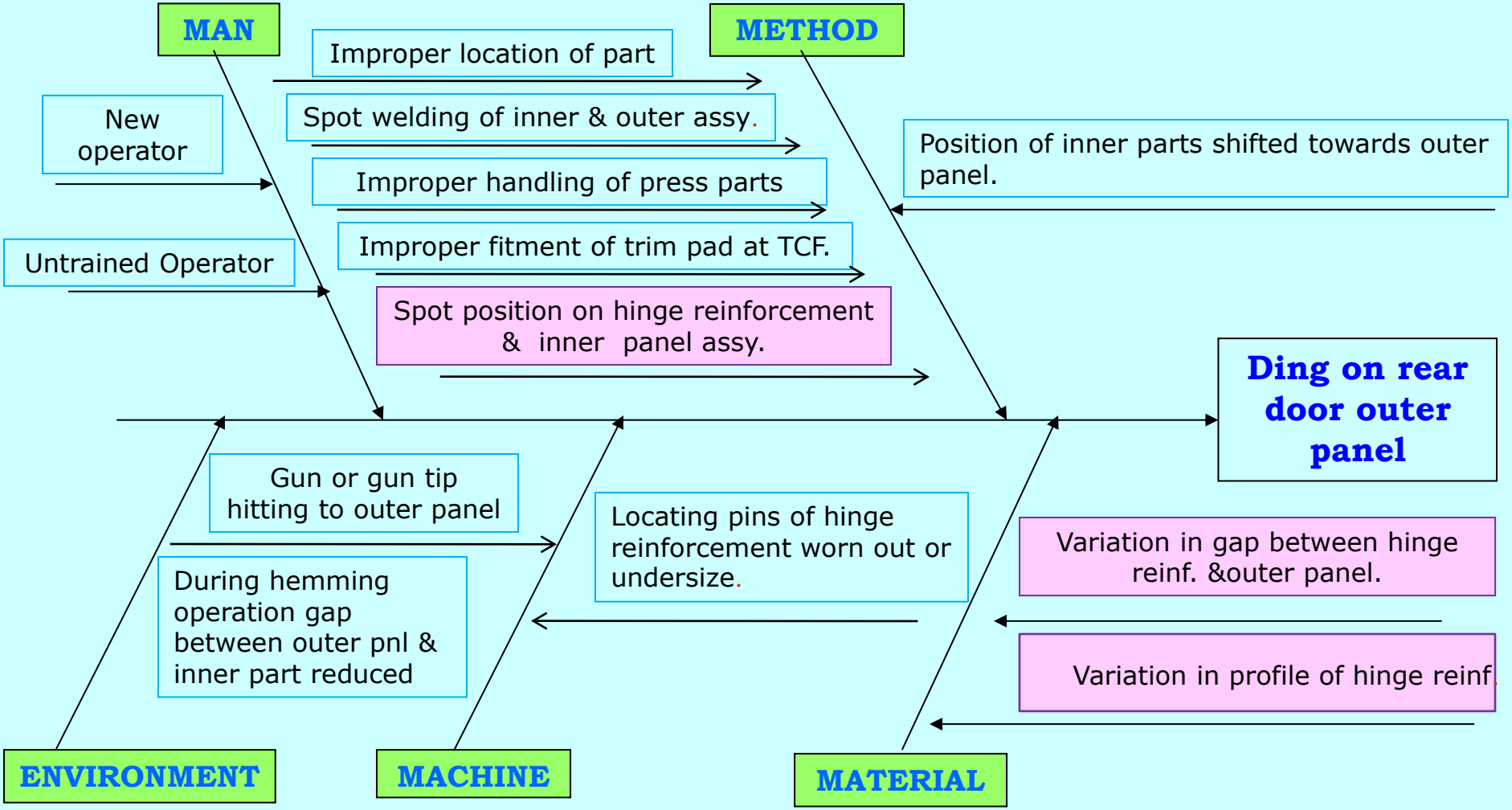

List of possible causes

Sr. no.	Possible Causes
1	New operator
2	Untrained operator
3	Improper location of part.
4	Improper handling of panels.
5	Improper fitment of trim pad at TCF.
6	Locating pins of hinge reinforcement worn out or undersize.
7	Improper application of wax at Paint shop.
8	During Hemming operation in hemming press of rear door assy.
9	Variation in gap between hinge reinforcement & outer panel.
10	Variation in profile of hinge reinforcement.
11	During spot welding of inner & outer assy at st.70.
12	Spot position on hinge reinforcement to inner panel.
13	Position of inner parts shifted towards outer panel.

TEST OF HYPOTHESIS

5.2 Confirm the probable cause:

No	Probable Cause	Testing method	Observations	Conclusion
1	Locating pins of hinge reinforcement worn out or undersize.	Diameter of locating pins (10-0.2 mm) checked.	Diameter of locating pins found within specification (9.82 mm)	Invalid

No	Probable Cause	Testing method	Observations	Conclusion
2	Variation in gap between hinge reinforcement & outer panel	Cut section taken on defective (ding) door & blue matching done	After blue matching ,high point of hinge reinforcement fouls to door outer panel.	**Valid**

Following are the photographs of cut section of defective (ding) door.

Ding

High point

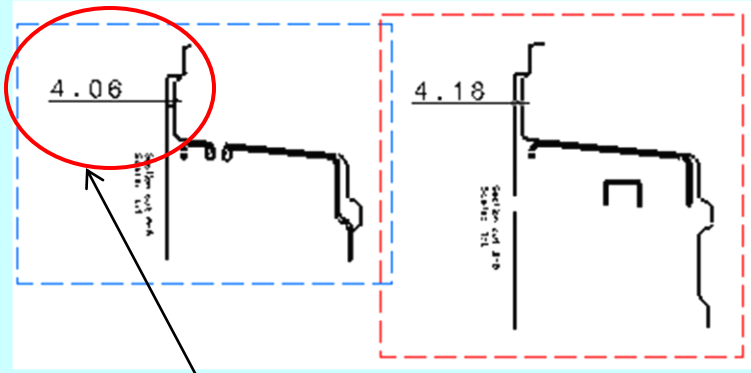

Required gap

No	Probable Cause	Testing method	Observations	Conclusion
3	Variation in profile of hinge reinforcement.	Part checked in checking gauge & 3 mm gap.	Gap found not ok & profile changed by 5 degree.	**Valid**

Gap found not ok

No	Probable Cause	Testing method	Observations	Conclusion
4	Improper fitment of trim pad at TCF.	Trim pad fitment process observed at Trim 1 in Chakan TCF	No any fitment of Trim pad on or near the concern area.	Invalid

Following is the photograph of trimmed door at TCF.

Concern area

No	Probable Cause	Testing method	Observations	Conclusion
5	Spot position on hinge reinforcement to inner panel	Cut section taken on defective (ding) door & blue matching done	After blue matching ,high point of spot fouls to door outer panel.	**Valid**

Following is the photograph of cut section of door.

Spot position

Concern area

WHY - WHY Analysis

5.3 Identify the root causes: (Use Format MQS/MAPS/F05)

Valid Probable Cause	WHY	WHY	WHY	WHY	WHY	ACTION
1) Variation in gap between hinge reinforcement & outer panel.	Variation in profile of hinge reinforcement.	Variation in Forming die	Die and punch profile wear out.			Hinge reinf. Profile correction to be done.
2) Spot welding on hinge reinforcement to inner panel.	High point of spot fouls to outer panel.	Spot position shifted towards the styling line.				OPL given to stage operators.

6. Implement the corrective measures

6.1 Actions Decided

Root Cause	Action Plan	Target Dt	Resp.	Status
Die and punch profile wear out.	1)Panel profile to be extracted. 2)As per panel profile ,punch & die profile to be made. 3)Manual template to be made by clay. 4)Matching of Punch & die.	15 Sept. 2012	Shivam Paints	completed
Checking of part	Parts to be checked in checking gauge.	15 Sept. 2012	Shivam Paints	completed
Spot position shifted towards the styling line of outer panel	OPL to be given to stage operators.	20 Sept. 2012	Prabhakar	completed

6. Implement the corrective measures

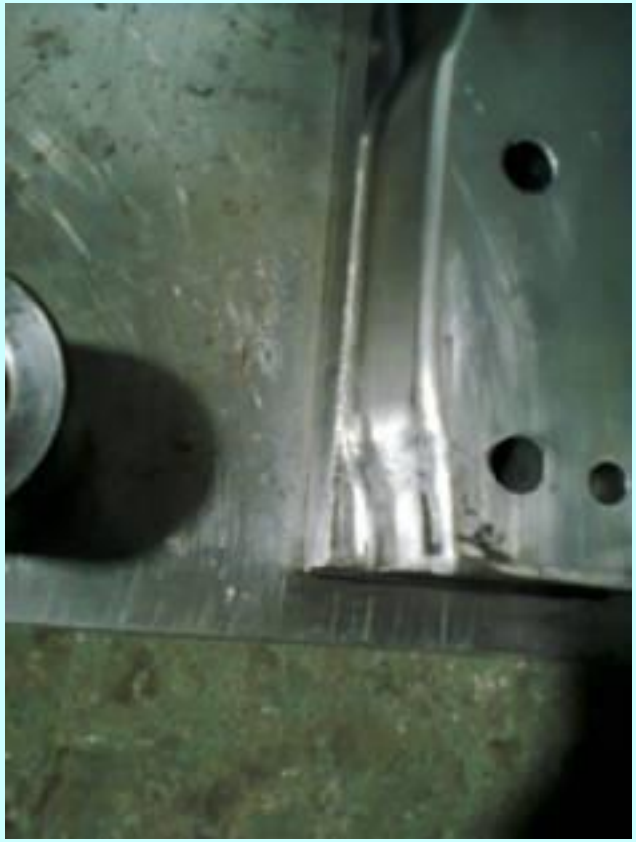

Die & punch profile matching.

6. Implement the corrective measures

Profile corrected area

Gauge to check the profile of hinge reinforcement.

7. Check & confirm the results & effects

7.1 Verify Results:

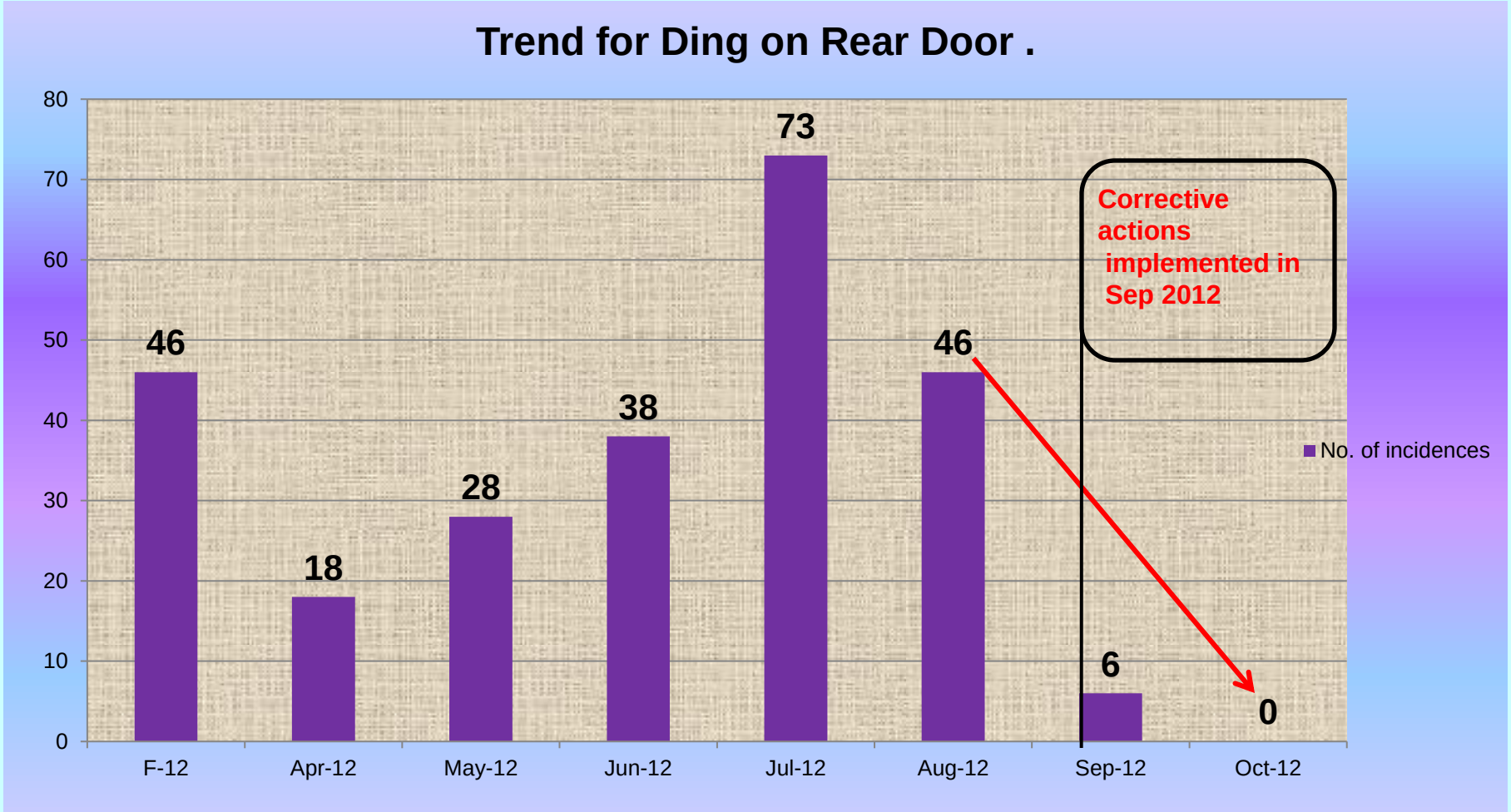

7. Check & confirm the results & effects

7.2 Full Scale Implementation plan:

1. All decided actions implemented.

2. Effectiveness of actions has been audited on 24.10.2012 by MQA team.

3. Effectiveness of all the actions resulted in Chakan CSI .

7.Check & confirm the results & effects

7.3 Tangible benefits:

1. Ding concern reduced to Zero from 203 incidence from the month of July to October.
2. Zero incidences at FRC, FTBO, NOVA B , NOVA C & Chakan RFI in the month of September and October.
3. Annual cost saving :- 70560 Rs/annum.

Check & confirm the results & effects (Cont…)

7.3 Intangible benefits:

1. Morale improved.

2. Team Work Built up.

3. Confidence Boost up.

8. Standardisation

8.1 Updation of documents:

S N	Document	Target date	Responsibility	Status
1	SCAP for Hinge reinforcement (0103BG0660/670N) from Supplier (M/S VRM METAZINE PVT LTD)	Sep 2012	Giri Debabrata/ Gokul/Nitin	Closed
2	Control plan & PFMEA updated at supplier end of (0103BG0660/670N)	Sep 2012	Giri Debabrata/ Gokul/Nitin	Closed
3	Tool maintenance plan/Report/History Card updated at supplier end.	Oct 2012	Giri Debabrata	Closed

8.2 Training:

S.N.	Training Identified	Target date	Responsibility	Status
01	Training (OPL) given to operators for spot position on hinge reinforcement.	Sept 2012	Prabhakar Sonawane	Closed

8. Standardisation

8.2 Training:

1. OPL

8.3 Additional Audit / Check

1. Supplier Audit
2. 2A-2B audit
3. Supervisory check sheet

9. Summarise & Plan future actions

9.1 Conclusion:

Ding on door concern eliminated by correcting the part as per drawing in the die which is so important factor for assembly of two parts & spot welding process.

9.2 Horizontal Deployment:

Scorpio Body shop.

9.3 Lessons Learnt:

Things Gone Wrong : Part was not as per drawing specification.

Things Gone Right : 1.We study & understand the process at Chakan TCF & conclude.

2.Hinge reinforcement profile correction done in die as per specification.

3. Problem can be solved easily by QC Story approach of the CFT-SYSTEMATIC PROBLEM SOLVING APPROACH.

THANK YOU !!!